Radio Control Keypad For FT891

Christian NV2J

January 30, 2022

Contents / Objectives

- Story about learning stuff through Amateur Radio
- Motivation to other (non-hardware) people

Table Of Contents

About Myself

- Software engineer
- Radio Amateur since 2017
- Still beginner
- Little hardware experience
  - This is where I am learning most!

Motivation

1. How to build simple hardware?
2. I want to build my own keyboard (no pre-made PCBs, I want to make one)
3. Got an introduction from George, KJ6VU
   - PCB design tool
   - how to have PCBs made
4. Annoyed by menus in Yaesu FT891
   - Example: Changing power takes scrolling through menus
5. Make a keypad that can control some features in the radio!

Starting Situation

- No idea about making PCBs / hardware
- Want to learn about it
- Want more buttons for my radio

Overview

We are going to need:

- A keypad
- A controller that tells the radio what to do
- Some software running on the controller

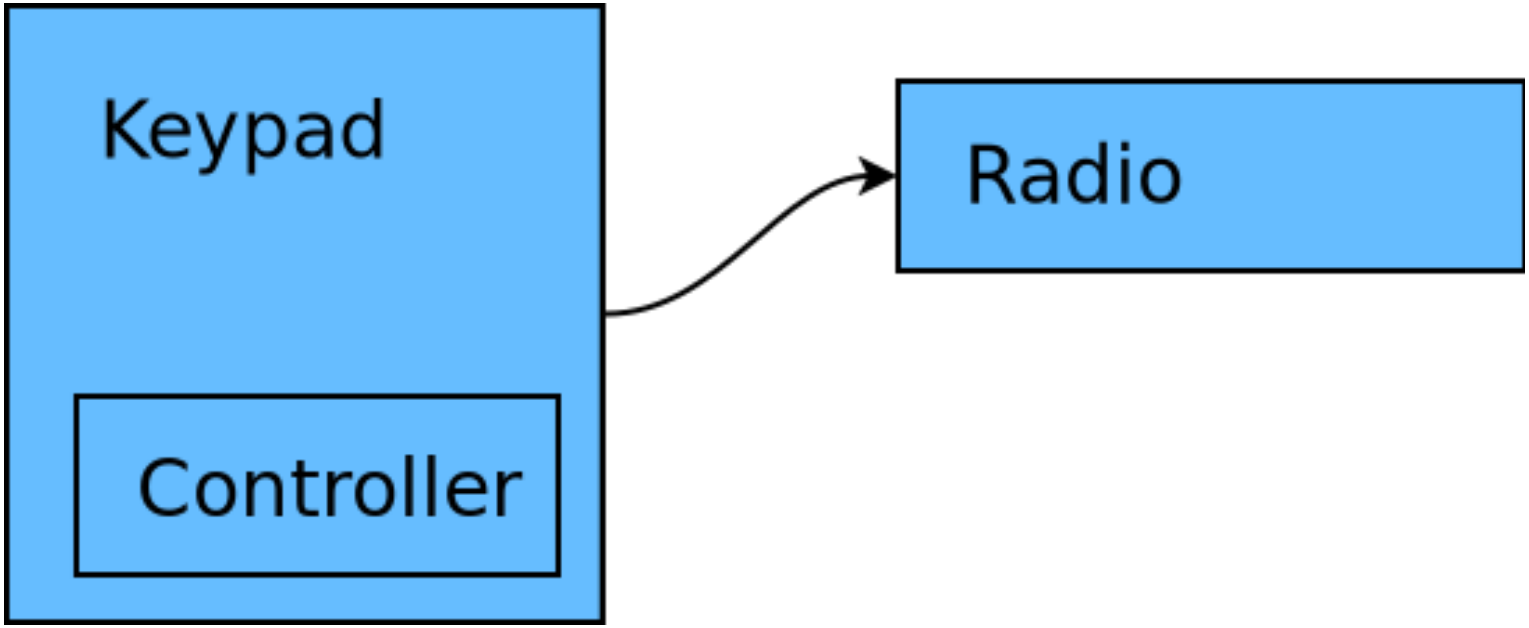

Keypad

- Designing keyboard from scratch
- In KiCAD
- Much motivation from intro lesson by KJ6VU
- Other sources from the web:
  - How a keyboard matrix works
  - Keyboard University

First Make A Simpler Keypad

- Just act as a USB keyboard device
- No additional fancy stuff
- Wanted to make one anyway

Controller

Thoughts

- Keypad useless without controller..
- Arduino? Weak and expensive
- Designing something onto the PCB?
  - I'm scared! Software person!

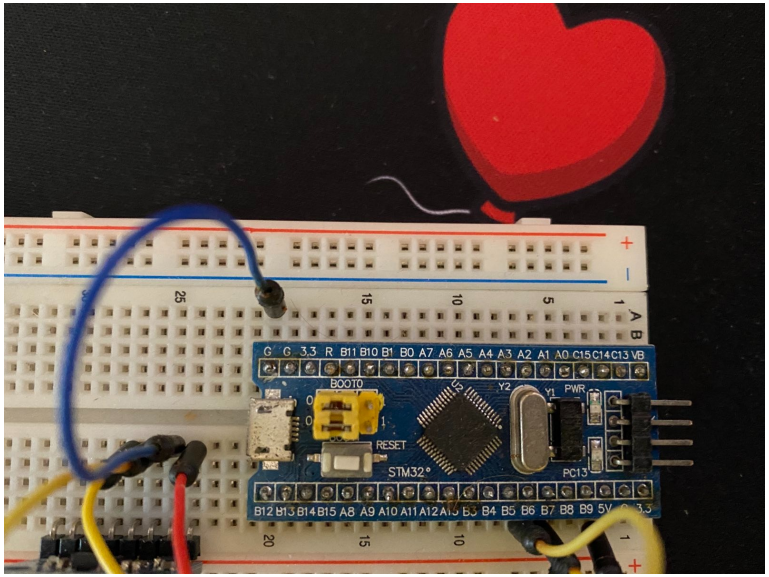

Bluepill

- strong and cheap; STM32F103, ARM M3 core, 72MHz
- see stm32-base.org
- good for keypad!

Learn KiCAD

https://docs.kicad.org/

Get Bluepill Files For KiCAD

- e.g. https://github.com/tomaskovacik

Make A Schematic

- insert a few switches (Cherry MX) and diodes
- connect them to GPIO pins of the bluepill

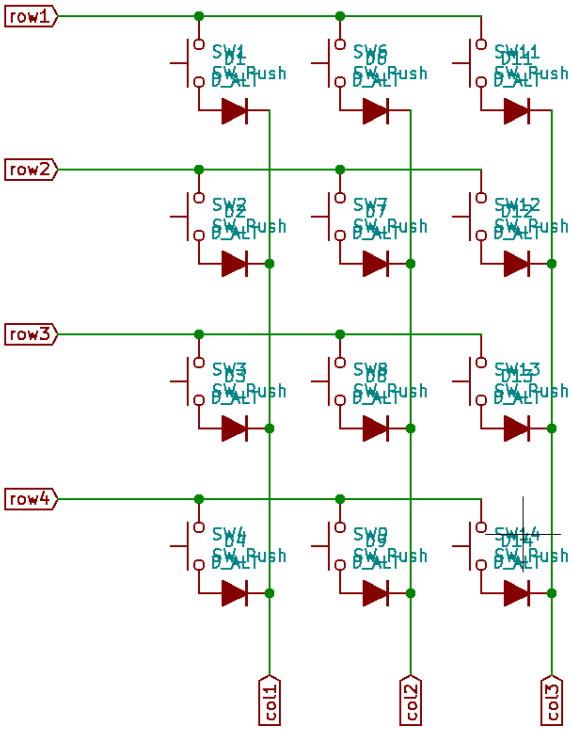

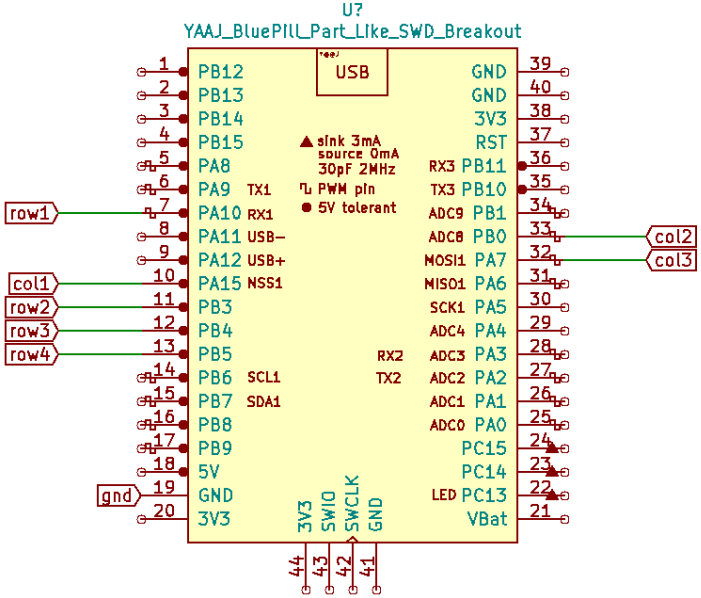

Create A Circuit Board

Create A PCB From Schematic

- ask KiCAD to generate PCB
- move things around to make it fit
- make sure distances between switches are correct
- add a few holes for standoffs
- add wiring manually

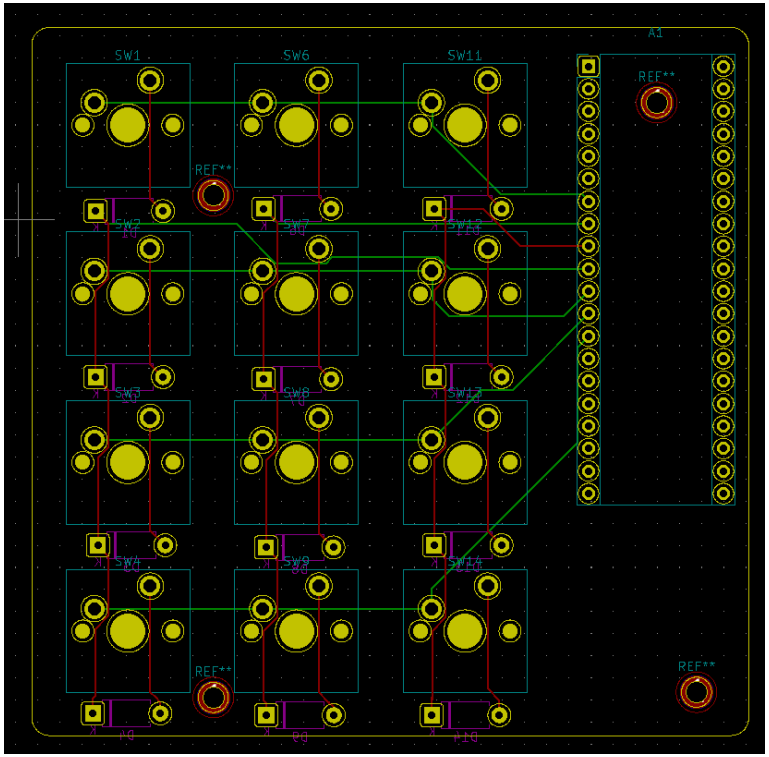

Ordering PCBs

- ask KiCAD to generate fabrication files ("Gerber" format)
- https://jlcpcb.com/ used at the time
- $3.10 for the boards; $12 shipping

Solder The Board

Assembly

- solder diodes and switches
- use socket for bluepill
- get nice keycaps from scrap-box
- Sources: `https://kbdfans.com/` etc.

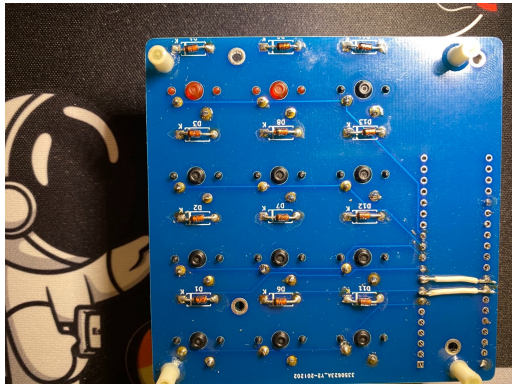

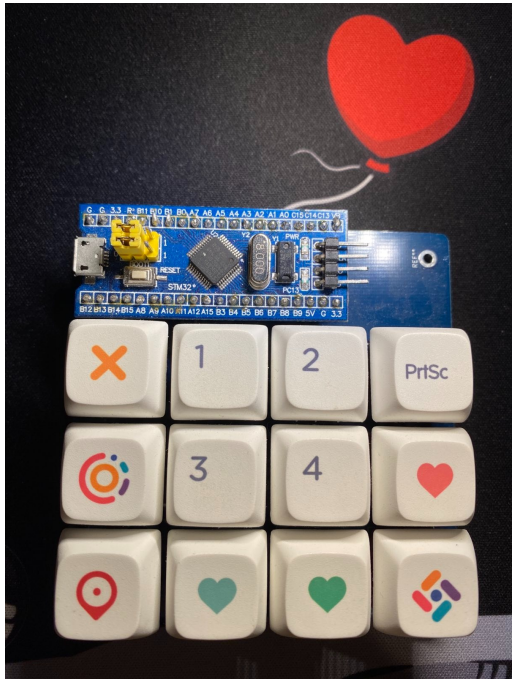

Blackpill Controller

- need USB host capability
- "Blackpill"
- similar to bluepill
- strong and USB host and relatively cheap!
- STM32F401
- good for radio control!

Update Schematics and PCB

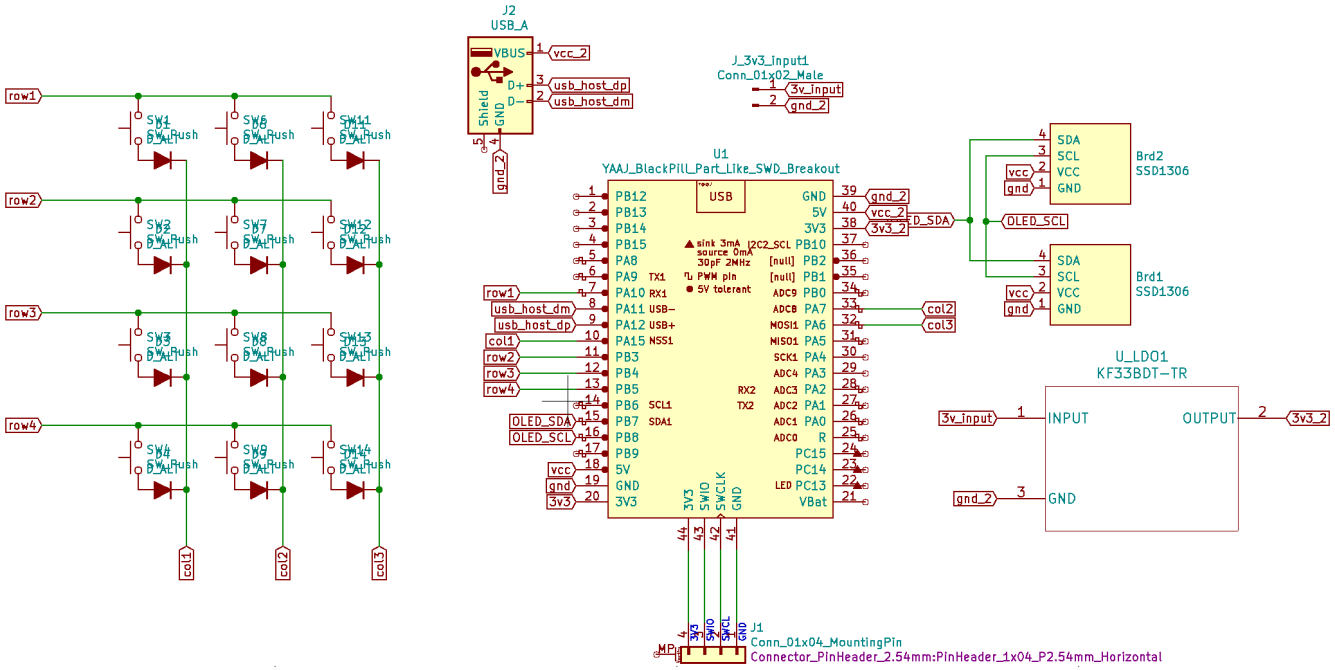

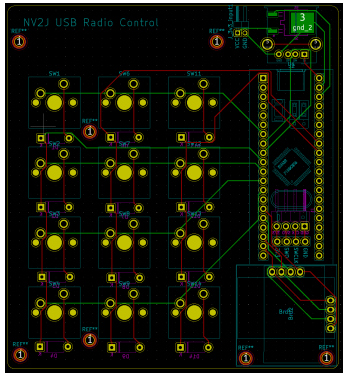

Getting Started

- STMicro CubeMX
- generates C skeleton you can fill out
- configure which pins are used e.g. for USB
- CubeMX generates code, you need to add functions that
  - read the keyboard matrix
  - send and receive via USB

Reading The Keys

- Read out each row of the keyboard
- Check which column is active
- Send the respective command to the radio

Talking To The FT891: SiLabs CP210x USB-To-Serial

- Some issues with virtual com port
  - Change a few defines in USB host header to VENDOR_SPECIFIC
  - Replace GetLineCoding and SetLineCoding with direct control requests to CP210x
- Silicon Labs CP210x documentation
- Your mileage will vary with different USB-to-serial chips
- If you have a radio with simple serial port, you're lucky!

Computer Aided Transceiver

What is CAT?

- Interface for controlling radios
- Simple protocol
  - Send command – maybe receive response
  - ASCII strings

Example

- Send "FA014250000;" to the radio
- Radio sets frequency to 14.25 MHz
- Send "FA;"
- receive "FAxxxxxxxxx;"
- "xxx.." is the current frequency

Commands for your radio

- Check your manuals
- FT891: FT891 CAT manual (PDF)

It's Done!

Final Situation

- *Some* idea about hardware
- Want to make/learn more
- Have buttons for the radio now!

Opens/Improvements

- Need a metal case for the keypad
- Write software in Rust? (just because?)
- Add testing step before manufacturing